Gemini Pickups

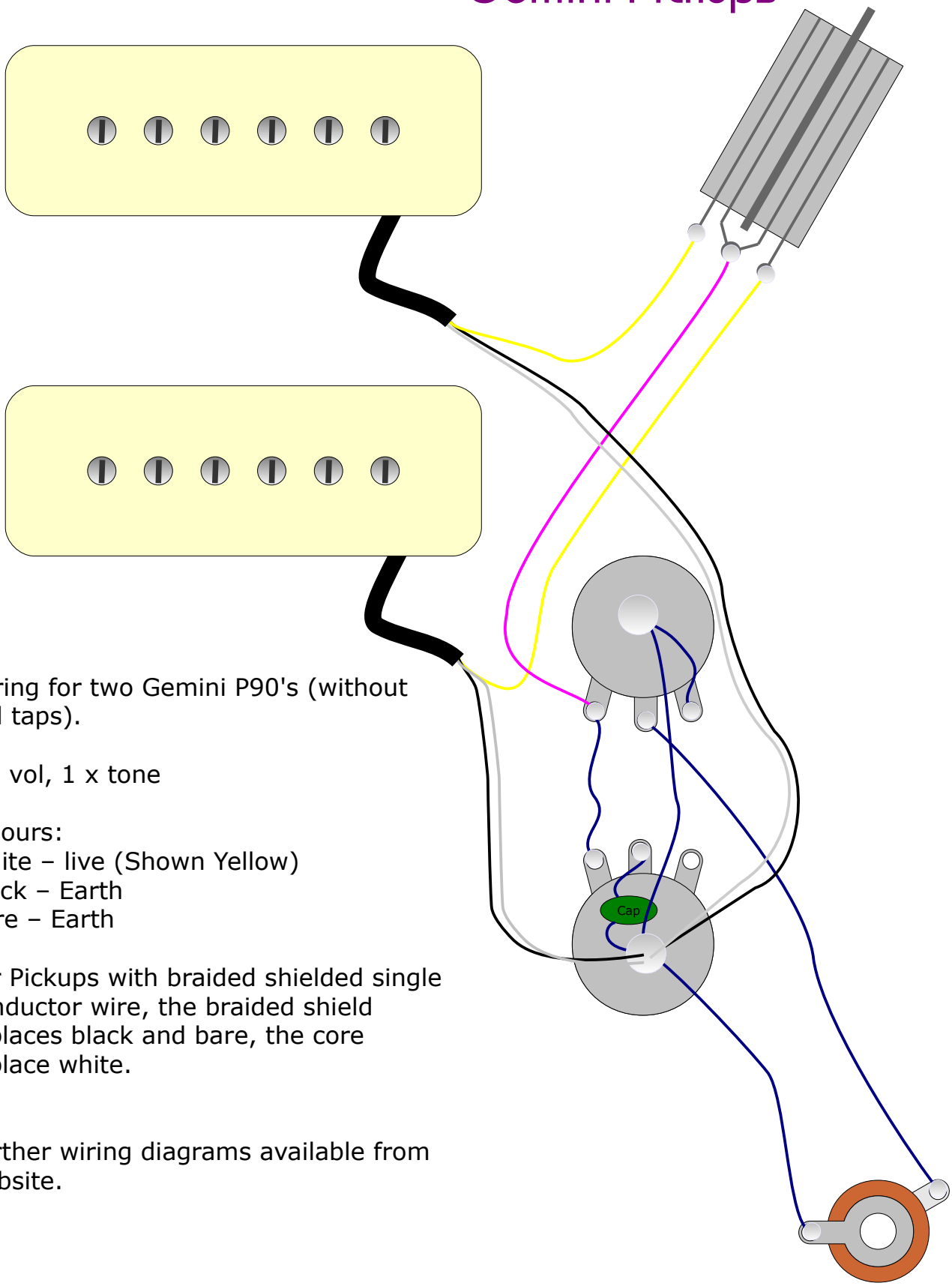

Wiring for two Gemini P90's (without coil taps).

1 x vol, 1 x tone

Colours:
White – live (Shown Yellow)
Black – Earth
Bare – Earth

For Pickups with braided shielded single conductor wire, the braided shield replaces black and bare, the core replace white.

Further wiring diagrams available from website.

Copyright Gemini Pickups 2012
www.geminipickups.co.uk